Poldina _Wall

Poldina is a rechargeable battery-powered cordless wall lamp, available in two versions. A "touch" control on the head allows switching on/off, dimming, and selecting the color temperature of the light (2200 K, 2700 K or 3000 K). It is suitable for both indoor and outdoor use. An electronic control system monitors the remaining autonomy and ensures a constant luminous flux until the battery runs out. Recharging is therefore optimized and always properly done. The lamp comes with a USB Type-C cable for recharging; the battery charger is included. It can be customized with a ceramic cover, to be purchased separately

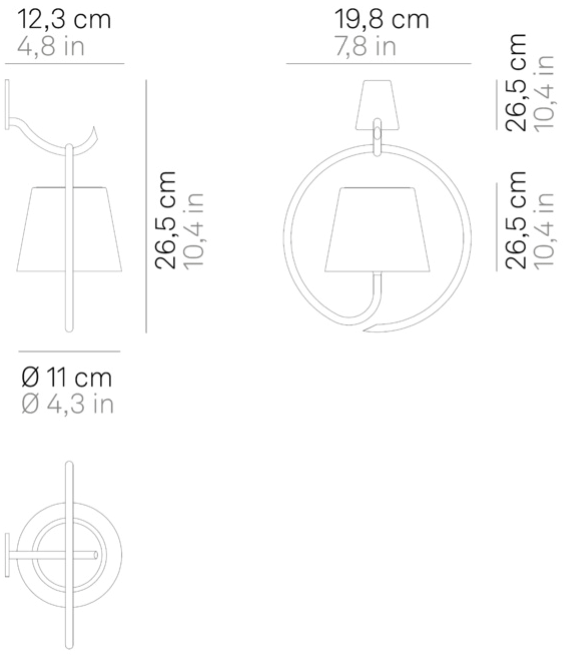

LED | dimmable | IP54

LD0289

	White	**B3**		Corten	**R3**
	Dark grey	**N3**			

The company reserves the right to modify product specifications.
For more information visit **www.zafferanoitalia.com**

zafferano
LAMPES-À-PORTER

Poldina _Wall

Lighting specifications

source	LED
type	SMD
total power	2,2 W
power LED	2,0 W
color temperature	2200 - 2700 - 3000 K
lumen lamp	185 - 199 - 203 lm
lumen LED	234 - 251 - 256 lm
beam angle	45°
CRI	> 80
class	F
dimmer	TOUCH DIMMER
motion sensor	NO

Electrical specifications

voltage	100-240V
frequency	50/60 Hz
input	100-240V
output	5 Vdc max 1A
battery	2 cell li-ion battery pack mod. 18650 3,7v - 2200 ma/h
battery life	9 h.
charging time	6 H.

ACCESSORIES

LD0280UA

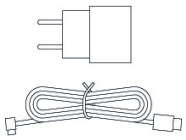

2.5 cm •4 cm •8 cm •IP20
• 100-240V• 50/60 Hz

Black

LD0340RA

6 cm •13.5 cm •4.5 cm •2,2 W
•IP20 • 100-240V• 50/60 Hz

Black

LD0350

Ø 13 cm •10 cm • 100-240V
• 50/60 Hz

Green stripes 00
Blue stripes 02
Light blue fish 04
Yellow stripes 01
Red stripes 03

The company reserves the right to modify product specifications.
For more information visit www.zafferanoitalia.com