Treviso _suspension

Wall-ceiling and suspension lamps, with diffuser in mouth-blown, satin finish opal triplex glass; matt white, black or grey painted metal frame; white painted metal frame, with outer finishing in matt white, black or grey painted (customisable on request). The product is suitable for indoor use only.

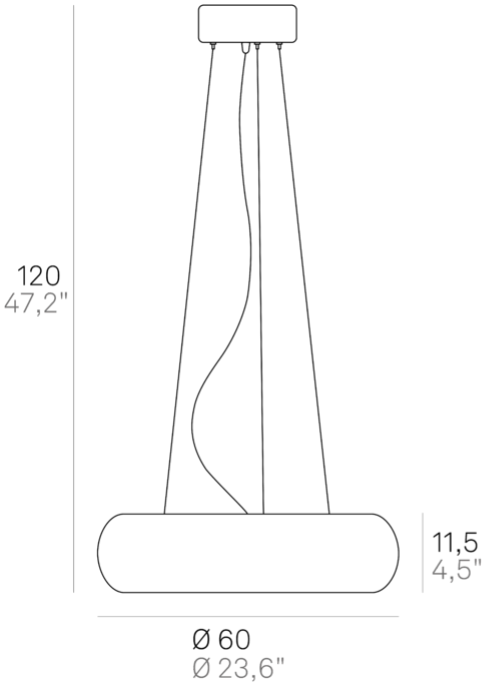

LED | dimmable | IP20

LD121323

	White	**B**

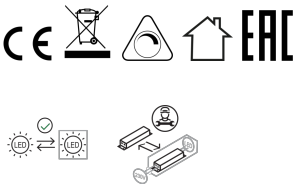

The company reserves the right to modify product specifications.
For more information visit **www.zafferanoitalia.com**

Treviso _suspension

Lighting specifications

source	LED
type	SMD
total power	29 W
power LED	24 W
color temperature	3000 K
lumen lamp	2070 lm
lumen LED	3000 lm
beam angle	116°
CRI	> 90
class	E
dimmer	DALI
motion sensor	NO

Electrical specifications

voltage	220-240V
frequency	50/60 Hz
input	220-240V
output	1,2 A

ACCESSORIES

The company reserves the right to modify product specifications.
For more information visit www.zafferanoitalia.com